Sign Language Coach

M.Vasantha lakshmi
Assistant Professor, Department of Telecommunication Engineering
BMS College of Engg, Bangalore, Karnataka, India

Pupul Mayank
Department of Telecommunication Engineering
BMS College of Engg, Bangalore, Karnataka, India

Nadir Ahmed
Department of Telecommunication Engineering
BMS College of Engg, Bangalore, Karnataka, India

Rohit Banka
Department of Telecommunication Engineering
BMS College of Engg, Bangalore, Karnataka, India

Manish Gathke
Department of Telecommunication Engineering
BMS College of Engg, Bangalore, Karnataka, India

Abstract- Sign language is the language of communication for the deaf people. It is the collection of standardized gestures, with its own grammar. The objective of this paper is to design a useful and fully functional real world product that efficiently translates the movements of fingers into American Sign Language. This paper describes computer based method to enhance the communication between normal people and deaf-mute people.

Keywords – American Sign Language, Flex sensors, alphanumeric display, Flash program memory

I. INTRODUCTION

A sign language is a language which, instead of acoustically conveyed sound patterns, uses visually transmitted sign patterns to convey meaning simultaneously combining hand shapes, orientation and movement of the hands, arms or body, and facial expressions to fluidly express a speaker's thoughts. Wherever communities of deaf people exist, sign languages develop. Their complex spatial grammars are markedly different from the grammars of spoken languages. In linguistic terms, sign languages are as rich and complex as any oral language, despite the common misconception that they are not real languages. The entire work has been divided in terms of segments.

In the first segment of the work, we have accomplished a method to convert American Sign Language (ASL) gestures into resistance and voltage values by the use of flex sensors and analog/digital converters

In the second segment of the work, we have implemented an embedded C program to generate alphabets from the corresponding set of input values. These input values being the various positions of fingers used in the American Sign Language. A Virtual human can more effectively communicate with the deaf –mute people than an animated character.

In the third segment of the work, we have proposed a microcontroller system to realize American Sign Language gestures by connecting the characters to the flex sensor and analog/digital converter's output. A range of voltage values correspond to a particular finger position and as per the position of the five fingers a letter is generated which is displayed in the LCD screen.

II. OVERWIEW AND FORMULATION

A. *Overview:*

Sign language Coach involves flex sensors that convert the hand gestures (bending of fingers) to resistance values depending upon the amount of bend of the sensors. The equivalent voltage values to the corresponding resistance values are found out using a voltage divider circuit. An analog to digital converter "ADC0809" has been used to convert the analog voltage values to digital values so that they can be fed to the P89V51RD2 microcontroller, which uses the digital input from the analog to digital converter and create corresponding character values stored in the microcontroller memory. An array of English alphabets is created for the three bent positions of the five fingers. Each position is given a value 1, 2 and 3.

The program code compares the value stored in the microcontroller memory with the bent positions equivalent to voltage value for the five fingers in a given voltage range and displays the alphabet that corresponds to the particular set. The alphabet is displayed on the alphanumeric LCD screen. If the finger is bent and it falls in a particular range then the corresponding bent position is identified for each finger. Microcontroller continuously polls all the five flex sensors attached to the five fingers and the amount of bent is identified and compared.

For example, If we are to show letter 'L', then the bent position of the five fingers are 1,1,3,3,3. The program code first initializes the voltage values to the straight position of fingers and it displays the calculated values on the LCD screen. A real time value has been used for comparison so that we don't need to store an initial value in the data memory and as the fingers of each individual have different dimensions. So, the voltage value calculated for the fingers differ by some amount. It then compares the next position of the fingers with this initial value. If the current value of voltage is less than the initial voltage +4 value then that position is considered to be position '1'. If the current value of voltage lies between initial voltage +4 and initial voltage +20, then this is position '2'. If the current bent gives a value of voltage more than initial value+20 then it is considered as position '3'. A loop is created which checks for this current bent in the flex sensors with the previously initialized voltage values and displays the calculated voltage and finger position on the LCD screen. If the 5 positions match to a previously stored data in the array. Then the equivalent character is displayed on the screen else it displays 'No match'.

In the program code the loop goes on indefinitely until it is reset by using an external interrupt so that we can create a word using the single alphabets.

The flex sensor is placed on the outer part of the glove fingers and is tightly fixed using plastic tapes. Instead of putting the flex sensor on the inner side of our palm, the flex sensor has been used on the outer part so that for a particular bent position we have a greater range of voltage values as on the inner side the radius of curvature for the flex sensor bent varies fast compared to the outer part. It is also helpful in implementing the glove for more people due the variation in finger dimensions. The flex sensor is then connected to the voltage divider circuit. The assembled circuit is shown in the block diagram.

B. *American Sign Language:*

American Sign Language (ASL) is a complex visual-spatial language that is used by the Deaf community It is a linguistically complete, natural language. ASL shares no grammatical similarities to English and should not be considered in any way to be a broken, mimed, or gestural form of English. In terms of syntax, for example, ASL has topic-comment syntax, while English uses Subject-Object-Verb. Some people have described ASL and other sign languages as "gestural" languages. This is not absolutely correct because hand gestures are only one component of ASL. Facial features such as eyebrow motion and lip-mouth movements as well as other factors such as body orientation are also significant in ASL as they form a crucial part of the grammatical system.

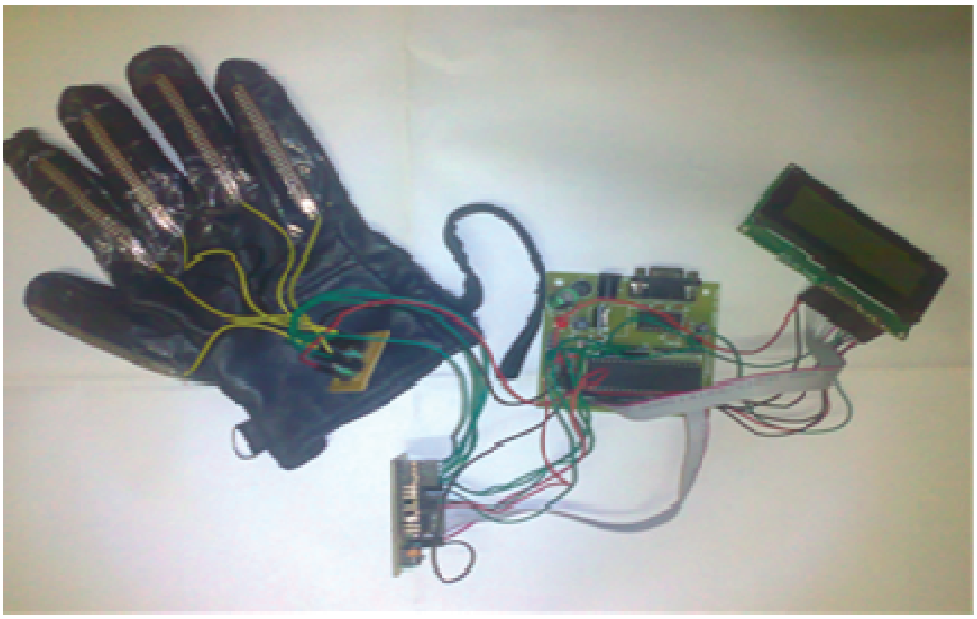

Figure 1. Sign Language Coach

Table 1: voltage values at different finger positions during test

A	{'1','3','3','3','3'	P	{'2','1','1','3','1'}
B	{'3','1','1','1','1'	Q	{'1','1','2','3','3'}
C	{'1','2','2','2','2'}	R	{'2','1','1','1','2'}
D	{'2','1','2','2','2'	S	{'2','3','3','3','3'}
E	{'3','3','3','3','3'}	T	{'2','1','3','3','3'}
F	{'2','2','1','1','1'}	U	{'3','1','1','3','3'}
G	{'1','2','3','3','3'}	V	{'2','1','1','3','3'}
H	{'2','2','1','3','3'}	W	{'2','1','1','1','1'
I	{'2','2','1','3','3'}	X	{'2','2','3','3','3'}
J	{'2','3','3','3','2'}	Y	{'1','3','3','3','1'}
K	{'1','1','1','3','3'}	Z	{'2','1','2','3','3'}
L	{'1','1','3','3','3'}	Blank space	{'1','1','2','1', '1'}
M	{'2','2','2','2','3'}	Erase	{'1','2','1','1','1'}
N	{'2','2','2','3','3'}	Good morning	{'1','1','1','2','1'}
O	{'2','2','2','2','2'}	Hello	{'3','3','3','3','1'}

	Thumb	Index Finger	Middle finger	Ring finger	Little finger

Position 1	1.04 V	1.05 V	1.09 V	1.01 V	0.98 V
Position 2	1.34 V	1.38 V	1.33 V	1.29 V	1.21 V
Position 3	1.67 V	1.71 V	1.8 V	1.76 V	1.75 V

C. Predefined Gestures of ASL:

In recent years, educators of young children have begun to use sign language for pre-lingual children. This helps the very young to avoid the frustrations of being unable to communicate with their parents and/or caregivers. Children as young as eight months old are able to communicate in a limited manner, although effectively, using sign language as shown in figure 2.

D. Flex Sensors:

Flex sensors are sensors that change in resistance depending on the amount of bend on the sensor. They convert the change in bend to electrical resistance - the more the bend, the more the resistance value. They are usually in the form of a thin strip from 1"-5" long that vary in resistance from approximately 10 to 50 kilo ohms. The Flex Sensor patented technology is based on resistive carbon elements. As a variable printed resistor, the Flex Sensor achieves great form-factor on a thin flexible substrate. When the substrate is bent, the sensor produces a resistance output correlated to the bend radius—the smaller the radius, the higher the resistance value. Flex sensors are analog resistors. They work as variable analog voltage dividers. Inside the flex sensor are carbon resistive elements within a thin flexible substrate. More carbon means less resistance. When the substrate is bent the sensor produces a resistance output relative to the bend radius. The flex sensor shown in figure 3 below changes resistance when bent. It will only change resistance in one direction. An unflexed sensor has a resistance of about 10,000 ohms. As the flex sensor is bent, the resistance increases to 30-40 kilo ohms at 90 degrees. The resistance variation is based on the basic circuit used in a plain voltage divider. It is used since we need to present a voltage to the Analog in device and the bend sensor merely changes resistance. In the circuit below the resistance of the bend sensor reduces (as a result of bending it into a convex shape) the voltage on Ain will go up towards 5V. If the resistance of the bend sensor decreases (as a result of bending it in the opposite direction) the voltage on Ain will fall towards Gnd (0V).

Flex Sensors are often used in gloves to sense finger movement. Flex sensors are used in gaming gloves, auto controls, fitness products, measuring devices, assistive technology, musical instruments, joysticks, and more.

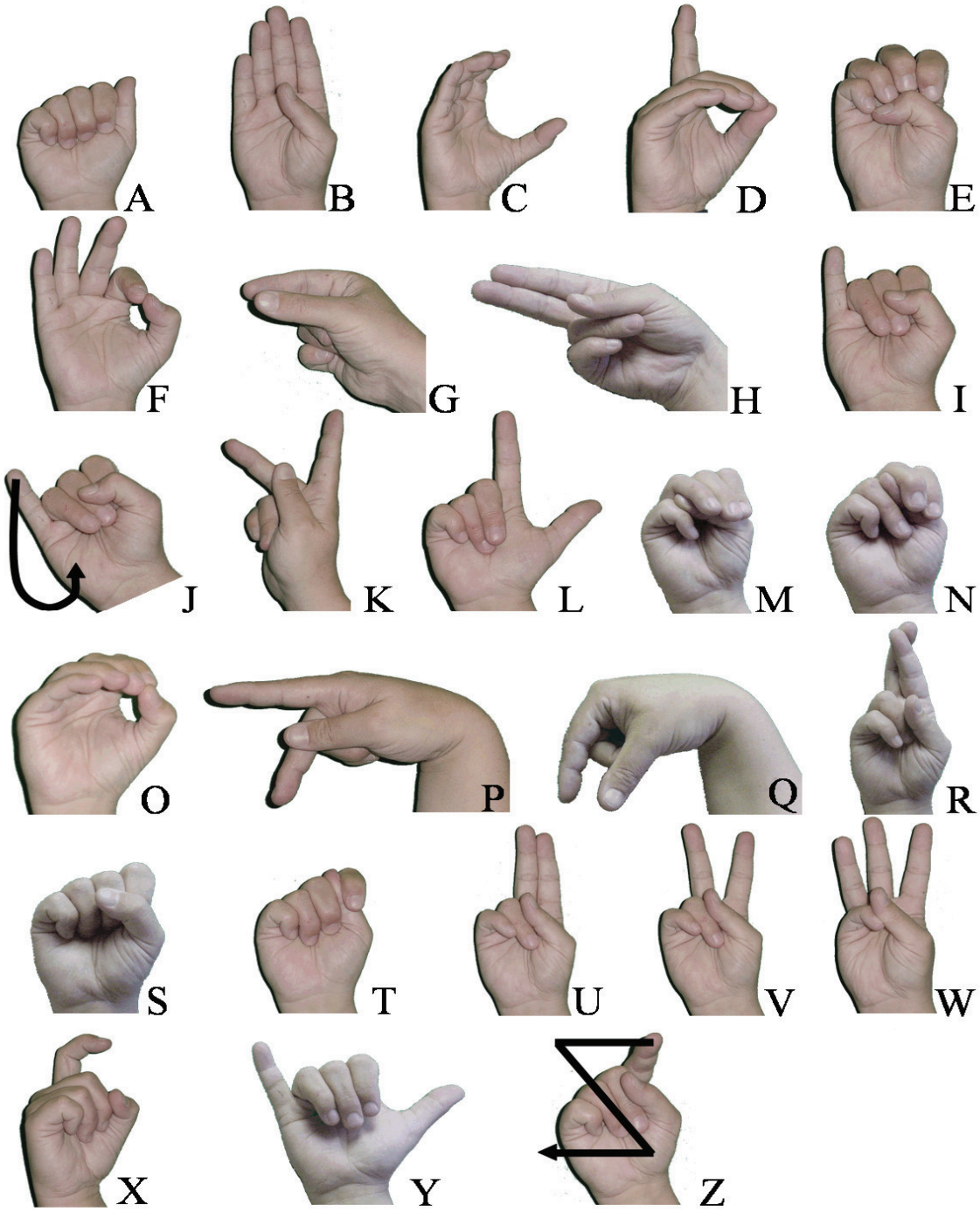

Figure2. ASL Gestures

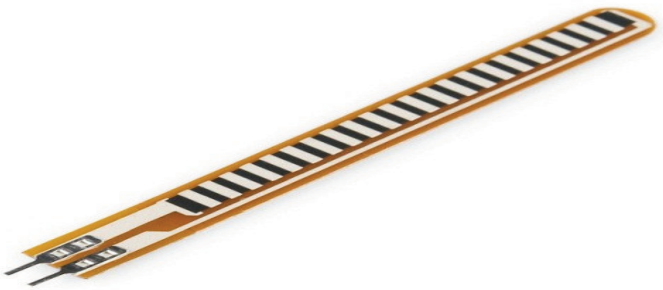

Figure3. Flex Sensor

E. P89V51RD2 Microcontroller:

The P89V51RD2 is an 8051 microcontroller with 64 kb Flash and 1024 bytes of data RAM. A key feature of the P89V51RD2 is its X2 mode option. The design engineer can choose to run the application with the conventional 80C51 clock rate (12 clocks per machine cycle) or select the X2 mode (6 clocks per machine cycle) to achieve twice the throughput at the same clock frequency. Another way to benefit from this feature is to keep the same performance by reducing the clock frequency by half, thus dramatically reducing the EMI. The Flash program memory supports both parallel programming and in serial In-System Programming (ISP). Parallel programming mode offers gang-programming at high speed, reducing programming costs and time to market. ISP allows a device to be reprogrammed in the end product under software control. The capability to field/update the application firmware makes a wide range of applications possible. The P89V51RD2 is also In-Application Programmable (IAP), allowing the Flash program memory to be reconfigured even while the application is running.

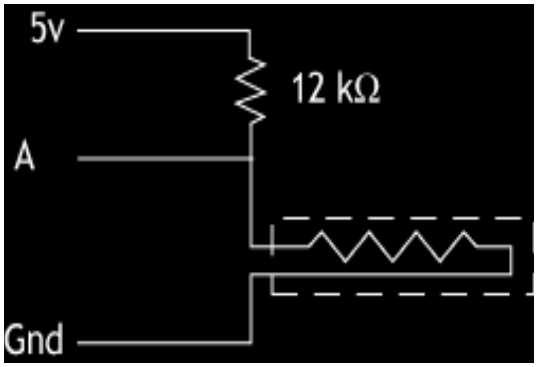

Fig. 4 Voltage divider

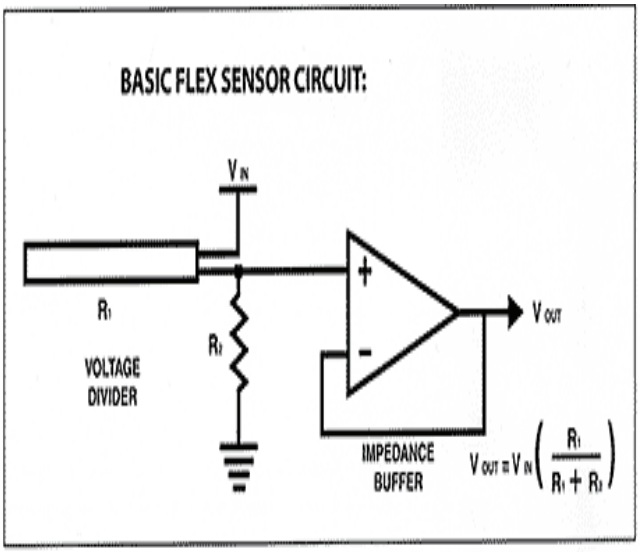

Fig 5 Flex sensor circuit

Figure 6. Flex Sensors insulated to gloves

F. Alpha Numeric LCD Display:

A liquid crystal display is a thin, flat electronic visual display that uses the light modulating properties of liquid crystals (LCs). LCs does not emit light directly. In liquid crystal displays (LCDs) of liquid crystal technology is the most common applications. It consists of a liquid crystal display, an array of tiny segments (called pixels) and to present the information that can be manipulated. In general, LCDs uses very low power than the cathode-ray tube (CRT) counterparts. Many LCDs are ruminative, means that they use only atmosphere light to illuminate the display. Even displays that do consume much less power than CRT devices require an external light source (i.e. computer displays).

G. MAX232 Connector

The MAX232 is an integrated circuit that converts signals from an RS-232 serial port to signals suitable for use in TTL compatible digital logic circuits. The MAX232 is a dual driver/receiver that includes a capacitive voltage generator to supply EIA-232 voltage levels from a single 5-V supply. Each receiver converts EIA-232 inputs to 5-V TTL/CMOS levels. These receivers have a typical threshold of 1.3 V and a typical hysteresis of 0.5 V, and can accept ±30-V inputs. Each driver converts TTL/CMOS input levels into EIA-232 levels. The MAX232 is a dual driver/receiver and typically converts the RX, TX, CTS and RTS signals. The receivers reduce RS-232 inputs (which may be as high as ± 25 V), to standard 5 V TTL levels.

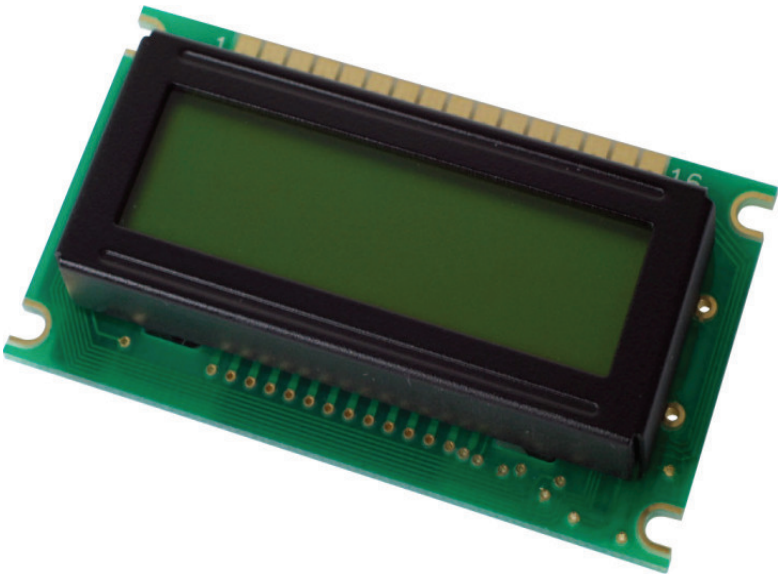

Figure7 LCD Controller

III. . FUTURE SCOPE AND APPLICATIONS

1. While we have the benefit of machine translators on the Internet, there is one very crucial group of people who lose out – those who rely on sign language. Fear not – the Sign Language Translator from Known Manufacturing, Inc. offers a new way of communicating with your friends who rely on sign language.

2. The Mobile ASL is an innovative application for deaf people and offers advantages without consuming too much bandwidth, thereby making experience faster, less costly and more enjoyable and can be applied to many video conferencing applications.

3. Videophone is a fast-growing telephone device used by sign language natives or Deaf signers who communicate with one another in sign language. It is capable of both audio and video transmission over a phone line or Internet line, in which fiber optics enable the speed of data transmission.

4. A sign language telephone device enables an aurally handicapped person who uses the sign language to converse with a normal person at a distant place who does not know the sign language. The sign language telephone device is placed on the side of the aurally handicapped person, and hand gestures of the sign language inputted from a sign language input means are recognized as the sign language, and the recognized sign language is translated to the corresponding language. The translated language word train is converted to synthesized voices and it is transmitted to a videophone on the side of a normal person. The voices from the videophone are recognized, and the recognized Japanese is translated to the sign language to generate sign language animations and they are displayed on the screen of a TV set on the side of the aurally handicapped person.

5. Sign language interpreter is a concept device that can translate hand gesture of a person into an oral language. This device would be highly beneficial for those people who are not able to speak. Sign language translator device has two major parts, a camera that can capture the image of hand movement and a speaker that can translate the motion into oral words. The speaker is customizable. You can adjust the volume of the speaker as well as select what kind of accent you would like it to speak. You can keep this device with you like wearing a locket around your neck.

IV.CONCLUSION

The Sign Language Translator device features a 320 x 240 touch screen display and is USB rechargeable, capable of running for up to half a dozen hours on a single charge. Since it is not able to string together a sentence in sign language just yet, you'd best have a basic working knowledge of American Sign Language and rely on this as a reference instead. The Mobile ASL is an innovative application for deaf people and offers advantages without consuming too much bandwidth, thereby making experience faster, less costly and more enjoyable and can be applied to many video conferencing applications. Videophone is a fast-growing telephone device used by sign

language natives or Deaf signers who communicate with one another in sign language. It is capable of both audio and video transmission over a phone line or Internet line; in which fiber optics enable the speed of data transmission. A sign language telephone device, comprising of a sign language telephone control device operatively connected to say videophone device via a network, which translates an input sign language, generates synthesized voices for transmission to say videophone device via said network, recognizes voices from said videophone device, and generates a sign language animation from the recognized results for a visual displays.

REFERENCES

[1] Ramakanth.A. Gayakwad "Op-amps and linear integrated circuits" PHI-Third Edition-Nov 1999.

[2] Kenneth J. Ayala" The 8051 microcontroller Architecture, Programming and Applications" Penram International Publishing (I) Pvt. Ltd. (Second Edition)

[3] Robert L. Boylestad & Louis Nashelsky "Electronic devices and circuit theory" PHI-Sixth Edition

[4] Muhamed Ali Mazidi & Janice Gillispie Mazidi "8051 microcontroller and embedded systems ", Pearson Education, 2003.

[5] http://www.deaflibrary.org/asl.html.

[6] http://neuroactivity.org/2011/05/16/mri-compatible-registration-of-jaw-movements-using-a-fiber-optic-bend-sensor/.

[7] http://www.sensorwiki.org/doku.php/sensors/flexion.